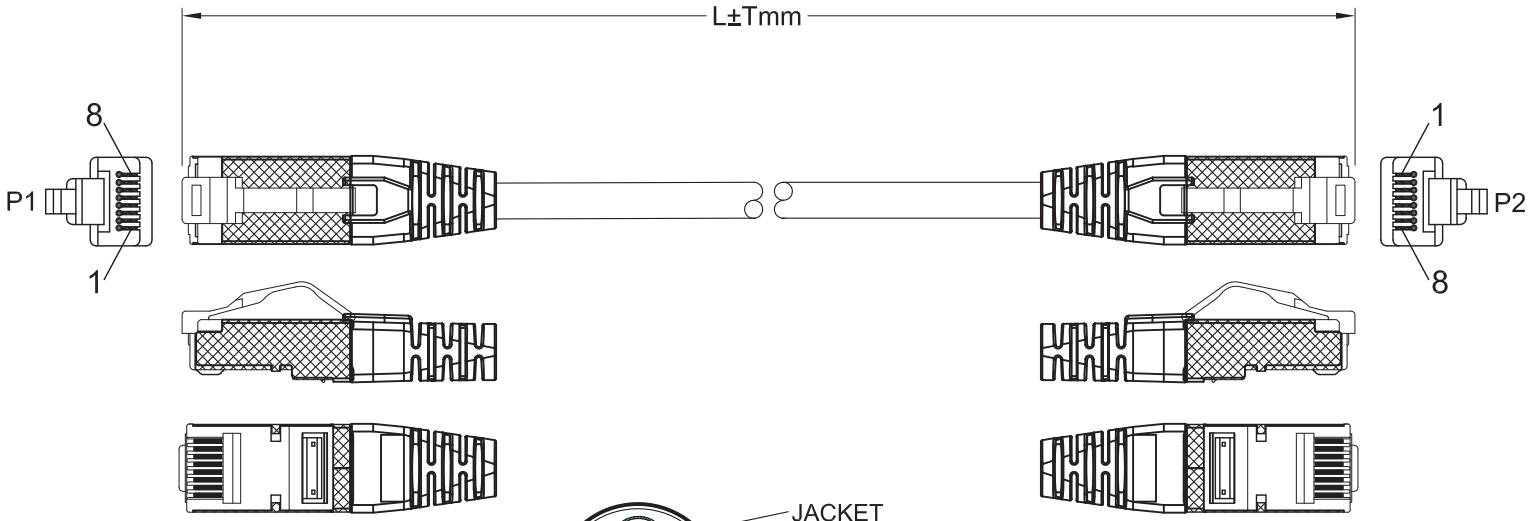

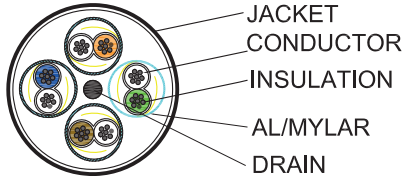

SEC:A-A

P1		P2	T568B
1		1	WHITE/ORANGE
2		2	ORANGE
3		3	WHITE/GREEN
4		4	BLUE
5		5	WHITE/BLUE
6		6	GREEN
7		7	WHITE/BROWN
8		8	BROWN
S		S	SHIELDED

TWO-PIECE PLUG WITH TANGLE-FREE LATCH

		DELOCK we move the world	
		Title: RJ45 Network Cable Cat.6A plug to plug with curved latch U/FTP	
Dat	2023 / 11 / 14		
Unit	mm	Item no.	80363-80368
Projection		Barcode	
Rev	A	File No.	88417