Delock SATA 6 Gb/s DOM Module 32 GB MLC SATA Pin 8 power -40 °C ~ 85 °C

Description

This SATA DOM module by Delock is especially suitable for use in indutrial PCs und Server.
The module has an extended temperature range of -40 ° C ~ 85 ° C and is designed for use in harsh operating conditions.

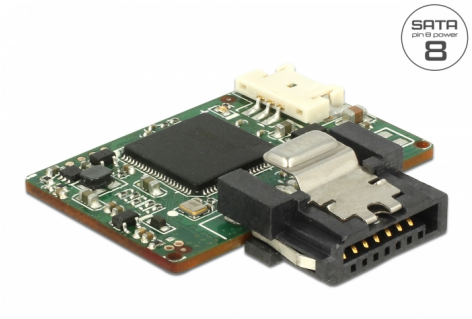

32 GB

Item no. 54749

EAN: 4043619547494

Country of origin: Taiwan, Republic of China

Package: Antistatic cover

Advantage: No additional power supply is required as power is provided via the SATA pin 8 connector. To use this application, a motherboard with SATA pin 8 connector is needed. The SATA pin 8 connector on the motherboard is of yellow colour. If no SATA pin 8 connector is available, this module can also be used via the standard SATA connector. For this purpose, the power supply is provided via the 3 pin power connector.

Schematic representation for SATA Pin 8

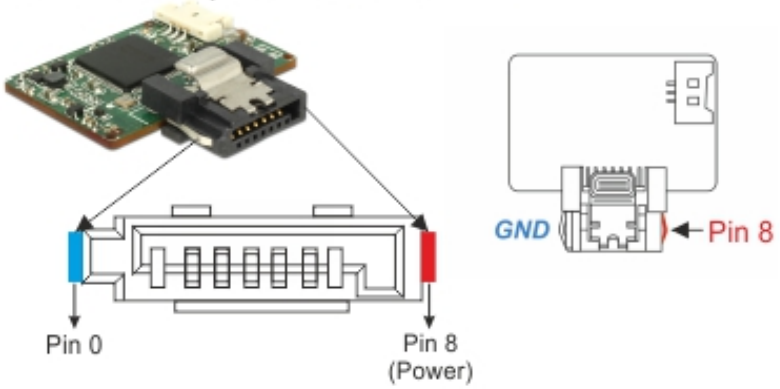

Standard power supply

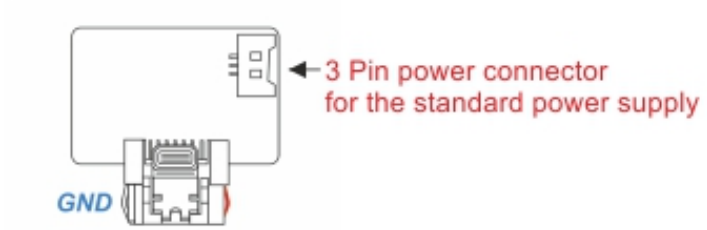

© 2024 by Delock. All names and symbols mentioned here are property of the respective producer.
Printing errors, changes and errors excepted.

Specification

- Capacity: 32 GB
- Interface: SATA 6 Gb/s
- Supports SATA pin 8 power
- Chip: Toshiba
- Flash type: MLC
- Maximum performance: 100 MB/s read, 40 MB/s write
- Maximum write cycles: 3000
- Maximum power consumption: 1.8 W (5 V x 370 mA)
- Write protect: no
- ATA Security: yes
- S.M.A.R.T.: yes
- Thermal sensor: yes
- Dimensions (WxLxH): 30 x 28.4 x 7.4 mm
- Vibration: 20G @ 7 ~ 2000 Hz
- Shock: 1500G @ 0.5 ms
- MTBF: >3 million hours
- Operation temperature: -40 °C ~ 85 °C - Industrial grade
- Storage temperature: -55 °C ~ 95 °C

System requirements

- A free SATA 8 pin or SATA 7 pin port
- For SATA 7 pin: power supply with a free 4 pin power connection

Package content

- SATA DOM module
- Power cable

Images

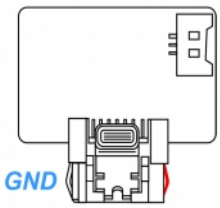

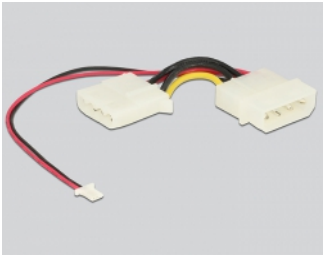

© 2024 by Delock. All names and symbols mentioned here are property of the respective producer.
Printing errors, changes and errors excepted.

Technical characteristics

Chipset:	Toshiba
Storage temperature:	-55°C - 95°C
Read:	100 MB/s
Maximum power consumption:	1.8 W
Maximum write cycles:	3000
MTBF:	3 million hours
Interface:	SATA 6.0 Gb/s
Shock:	1500 G @ 0.5 ms
Write:	40 Mb/s
Capacity:	32 GB
Thermal sensor:	yes
Vibration:	20 G @ 7 ~ 2000 Hz
Password protection:	Yes
Delock iSmart:	Yes

Physical characteristics

Length:	28.4 mm
Width:	30 mm
Height:	7.4 mm

© 2024 by Delock. All names and symbols mentioned here are property of the respective producer.
Printing errors, changes and errors excepted.